Product sheet

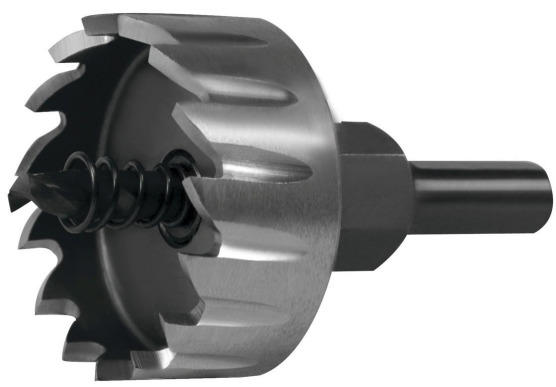

RUKO 65mm diameter high precision HSS-G core drill bit.

Brand: Ruko

Reference: TUR 128065

The Ruko-128065 HSS-G (Ø 65 mm) core drill is ideal for alloy steels, non-ferrous metals, and plastics. With a material thickness of up to 2.5 mm and a cutting depth of 5 mm, it is resharpenable and requires minimal pressure.

View product online

Description

The Ruko-128065-HSS-G (Ø 65 mm) hole saw is a high-precision tool designed for drilling in a wide variety of materials. With a material thickness of up to 2.5 mm and a cutting depth of 5.0 mm, this hole saw is optimized for efficient and clean cutting. Its right-hand cutting design allows for superior performance in industrial and DIY applications, and it is resharpenable to extend its lifespan and maintain its effectiveness.

This tool is especially recommended for working with alloy steels up to 800 N/mm² hardness, cast steel, non-ferrous metals, light metals, plastics, reinforced fabrics, plasterboard, and in light construction. It is important to note that it is not suitable for hammer drilling, and it is recommended to apply light pressure when starting to drill, maintaining constant pressure and avoiding oscillating movements.

For optimal performance, the use of coolant is recommended during the drilling process.

- Diameter: Ø 65 mm
- Material thickness: up to 2.5 mm
- Cutting depth: 5.0 mm
- Right-hand cutting
- Resharpenable
- Recommended for alloy steels (up to 800 N/mm²)
- Compatible with non-ferrous and light metals
- Use on plastics and reinforced fabrics
- Not suitable for hammer drilling
- Use of coolant recommended

Specifications

High	7,00
Width	7,00
EAN	4007140295163
Manufacturer	Ruko
Weight (kg)	0,3800
Depth	12,00

This document is based on the product page published in our store and is provided for information only. It is not contractual. It may contain errors or omissions and does not replace the manufacturer datasheet.

If you have any questions, contact our support team

Item downloaded on 27 November 2026