Product sheet

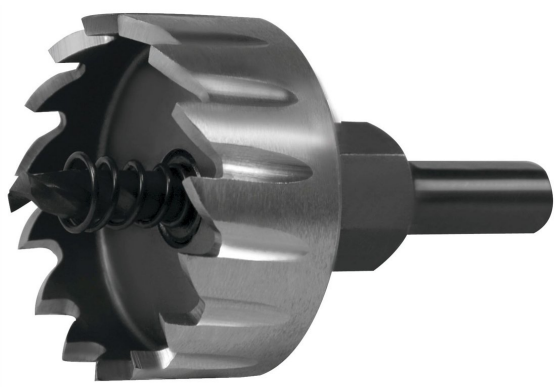

# RUKO 48mm diameter high precision HSS-G core drill bit.

Brand: Ruko

Reference: TUR 128048

The Ruko-128048 HSS-G (Ø 48 mm) core drill is ideal for alloy steels, non-ferrous metals, and plastics. With a material thickness of up to 2.5 mm and a cutting depth of 5 mm, it is resharpenable and requires minimal pressure.

**View product online**

## Description

The Ruko-128048-HSS-G (Ø 48 mm) hole saw is a high-precision tool designed for drilling in a wide variety of materials. With a material thickness of up to 2.5 mm and a cutting depth of 5.0 mm, this hole saw is ideal for working with alloy steels, cast steel, non-ferrous metals, light metals, plastics, reinforced fabrics, plasterboard, and in light construction. Its right-hand cutting design allows for optimal performance in specific applications, guaranteeing quality results.

It is important to note that this tool is not suitable for hammer drilling. It is recommended to apply light pressure when starting to drill and maintain constant pressure throughout the process.

For best results, it is suggested to avoid oscillating movements and use coolant to help extend the tool's lifespan.

- **Diameter:** 48 mm
- **Material Thickness:** Up to 2.5 mm
- **Cutting Depth:** 5.0 mm
- **Cutting:** Right-handed
- **Resharpenable:** Yes
- **Recommended Materials:** Alloy steels, cast steel, non-ferrous metals, light metals, plastics, reinforced fabrics, drywall
- **Applications:** Light construction
- **Drilling Pressure:** Low and constant
- **Movements:** Avoid oscillations
- **Use of Liquids:**Recommended coolants

## Specifications

| | |
|---|---|
| High | 6,00 |
| Width | 6,00 |
| EAN | 4007140295033 |
| Manufacturer | Ruko |
| Weight (kg) | 0,2400 |
| Depth | 12,00 |

This document is based on the product page published in our store and is provided for information only. It is not contractual. It may contain errors or omissions and does not replace the manufacturer datasheet.

If you have any questions, contact our support team

Item downloaded on 26 November 2026